TABLE I

DIHALOMETHYL DERIVATIVES OF CARBON, SILICON, AND GERMANIUM PREPARED BY THE PHENYL(TRIHALOMETHYL)MERCURIAL ROUTE

Reactant	Product[c] (% yield)	B.p., °C. (mm.) or m.p.	δ_H of CX_2H[h]
$(C_6H_5)_3SiH$[a]	$(C_6H_5)_3SiCCl_2H$[d] (90)	M.p. 151–152	6.0 (singlet)
$(C_6H_5)_3SiH$[a]	$(C_6H_5)_3SiCBr_2H$[e] (89)	M.p. 154–156	5.72 (singlet)
$(C_2H_5)_3SiH$[a]	$(C_2H_5)_3SiCCl_2H$[d] (79)	97–99 (25)	5.44 (singlet)
$(C_6H_5)_2SiH_2$[a]	$(C_6H_5)_2Si(CCl_2H)H$[d,f] (77)	118–119 (0.4)	5.70 (doublet, J = 2.5 c.p.s.)
$(C_6H_5)_2SiH_2$[a]	$(C_6H_5)_2Si(CCl_2H)_2$[d,g] (83)	M.p. 100–102	6.08 (singlet)
$(C_6H_5)_3GeH$[a]	$(C_6H_5)_3GeCCl_2H$[d] (88)	M.p. 154–155	5.95 (singlet)
$C_6H_5CH_2CH_3$[b]	$C_6H_5CH(CH_3)(CCl_2H)$[d] (35)	63–65 (0.8)	5.80 (doublet, J = 5.5 c.p.s.)
$C_6H_5CH(CH_3)_2$[b]	$C_6H_5C(CH_3)_2(CCl_2H)$[d] (58)	83–84 (1.5)	5.97 (singlet)
cyclo-C_6H_{12}[b]	cyclo-$C_6H_{11}CCl_2H$[d] (32)	59–60 (3)	5.60 (doublet, J = 4.0 c.p.s.)
$C_6H_5CH_2CH_3$[b]	$C_6H_5CH(CH_3)(CBr_2H)$[e] (6.5)	G.l.c. sample	5.88 (doublet, J = 4.5 c.p.s.)

[a] Benzene used as a solvent. [b] Excess of substrate used as solvent. [c] All products had satisfactory analyses. [d] From reaction of $C_6H_5HgCCl_2Br$. [e] From reaction of $C_6H_5HgCBr_3$. [f] Mercurial to silane ratio used = 1. [g] Mercurial to silane ratio = 3. [h] In p.p.m. downfield from tetramethylsilane (Varian A60 n.m.r. spectrometer).

(*via* diazomethane) into Si–H bonds was disclosed recently,[5] but no dichlorocarbene insertions into Si–H containing substrates have been reported to date. In the latter case the Si–H linkage would not survive the strongly basic conditions usually used in generating the dihalocarbene, nor, for that matter, would the product containing the Si–CX_2H unit be expected to be stable in the presence of base.

We report here the insertion of CCl_2 and CBr_2 units into C–H, Si–H, and Ge–H bonds. The general procedure involves heating $C_6H_5HgCCl_2Br$[6] or $C_6H_5HgCBr_3$[7] with the substrate at *ca.* 80° until all of the mercurial has been utilized[8] (*ca.* 2–4 hr.).

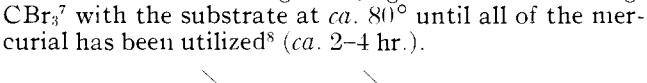

$$C_6H_5HgCX_2Br + \gtrdot M{-}H \longrightarrow \gtrdot M{-}CX_2H + C_6H_5HgBr$$

(X = Cl or Br; M = C, Si, and Ge)

Silanes and triphenylgermane react rapidly with these mercurials to give $\gtrdot$Si-CX_2H derivatives and $(C_6H_5)_3GeCCl_2H$ in very good yields (see Table I). An experiment in which 0.03 mole each of cyclohexene and triethylsilane were allowed to compete for 0.01 mole of phenyl(bromodichloromethyl)mercury gave 7,7-dichlorobicyclo[4.1.0]heptane and dichloromethyltriethylsilane in yields of 54 and 40%, respectively, a finding which demonstrates the high reactivity of the Si–H linkage toward such mercurials. A similar competition reaction between the less reactive triethylvinylsilane and triethylsilane resulted in the exclusive formation of dichloromethyltriethylsilane; no 1,1-dichloro-2-triethylsilylcyclopropane[9] could be detected.

Product yields in analogous insertions into C–H bonds were not as high, but still were considerably better than those reported for the sodium trichloroacetate-derived dichlorocarbene insertions by Fields.[3] When ethylbenzene or cumene was heated to 85° with $C_6H_5HgCCl_2Br$ an exothermic reaction commenced. Work-up of these reaction mixtures gave β,β-dichloroisopropylbenzene (35%) and β,β-dichloro-*t*-butylbenzene (58%), respectively. Yields of these products using the sodium trichloroacetate procedure were 17 and 33%, respectively. While such insertions into benzylic C–H bonds are not too surprising, the reaction of $C_6H_5HgCCl_2Br$ with an excess of cyclohexane at reflux for 2.5 hr., which gives dichloromethylcyclohexane in 32% yield, is noteworthy. Two other major products were encountered in this reaction: tetrachloroethylene (26%) and cyclohexyl bromide (22%). The former compound results in high yield in the controlled thermal decomposition of $C_6H_5HgCCl_2Br$ in the absence of a reactive substrate. The latter may provide a clue to the mechanism of the insertion into C–H bonds, and this question will be the subject of further investigation.

The insertion reaction of $C_6H_5HgCX_2Br$ compounds (X = Cl and Br) has valuable, and in some cases, unique, preparative utility, and the full scope of this reaction, in particular with regard to application to other metal– and metalloid–hydrogen insertions, is under active investigation. Experiments relating to the mechanism of these reactions are in progress. Further details concerning these and related experiments will be given at a later date. Pertinent data concerning the products mentioned above are given in Table I.

Acknowledgment.—The authors are grateful to the U. S. Army Research Office (Durham) and to the Alfred P. Sloan Foundation for generous support of this work.

(5) K. Kramer and A. Wright, *Angew. Chem.*, **74**, 468 (1962); *Tetrahedron Letters*, 1095 (1962).

(6) D. Seyferth and J. M. Burlitch, *J. Am. Chem. Soc.*, **84**, 1757 (1962).

(7) O. A. Reutov and A. N. Lovtsova, *Dokl. Akad. Nauk SSSR*, **139**, 622 (1961); *Chem. Abstr.*, **56**, 1469 (1962); see also ref. 1.

(8) Thin layer chromatography serves excellently in following the course of these reactions.

(9) Prepared by the reaction of $C_6H_5HgCCl_2Br$ with triethylvinylsilane in a separate experiment; b.p. 54–56° at 0.8 mm.; $n^{25}D$ 1.4735.

(10) Alfred P. Sloan Research Fellow.

(11) National Science Foundation Predoctoral Summer Fellow, 1962 and 1963; du Pont Postgraduate Teaching Assistant, 1962–1963.

DEPARTMENT OF CHEMISTRY
MASSACHUSETTS INSTITUTE OF TECHNOLOGY
CAMBRIDGE 39, MASSACHUSETTS
DIETMAR SEYFERTH[10]
JAMES M. BURLITCH[11]

RECEIVED JUNE 28, 1963

Chemical Applications of Sensitivity Enhancement in Nuclear Magnetic Resonance and Electron Spin Resonance[1]

Sir:

It has long been known that the effective sensitivity of a measurement being taken in a noise background can be enhanced by extending the measuring period. If the noise background is gaussian random and the integration period is T, the signal-to-noise improvement is proportional to $\sqrt{T}$. The increasing precision and stability of modern spectrometers makes it possible and worthwhile to exploit this potential sensitivity enhancement to a greater extent than is current chemical practice. It is completely practical to raise the sensitivity of existing spectrometers by a factor of 2 to 50. A sensitivity increase of 10 for the CH_2 and CH_3 n.m.r. peaks of 0.2% ethylbenzene in CCl_4 is shown in Fig. 1. There are now several combinations of commercially available electronic units that may be easily applied to achieve sensitivity enhancement by time integration at prices that are roughly 10–40% the cost of magnetic resonance spectrometers.

This situation provides opportunity for a great variety of chemical applications. As an analytical

(1) Supported in part by a grant from the Petroleum Research Fund of the American Chemical Society.

or compound identification technique, sensitivity enhancement can readily put n.m.r. spectrometers in the same range as present infrared spectrometers. Sensitivity enhancement can be particularly useful in organic chemistry where one is frequently dealing with small amounts of material or where it is necessary or desirable to use very dilute solutions.[2] The study of hydrogen bonding in alcohols is an example of this latter type of problem.[3] The use of C^{13} patterns to determine coupling constant shifts has also been made practical by sensitivity enhancement.[4]

The magnetic resonance of molecules in the gas phase can be aided, and in many cases made possible, by sensitivity enhancement. Where a fast reaction can be repeatedly initiated, the segmented time integration techniques described below will make possible the study of many reactions of chemical and biochemical interest.[5] The use of deuterium n.m.r. for chemical problems has recently been reported,[6] but the technique is presently limited because of low sensitivity. A straightforward application of time integration sensitivity enhancement can overcome this limitation.

The two approaches to sensitivity enhancement that may be adopted are use of a single continuous measurement over the total period[7] or the sum of n passes through the spectral range of duration (T/n). A central difficulty inherent to the first method is the practically unavoidable low frequency noise present in spectrometers. That part of the noise which arises from electronic sources such as "flicker noise" in vacuum tubes or solid state devices is effectively eliminated through use of synchronous or lock-in detectors but there are many sources such as radiation leakage, change in amplifier gain, and the general thermal, mechanical, and electrical environment which contribute principally to low frequency noise. This implies that one should sweep through the spectral range of interest as rapidly as it is possible to do so without sacrificing resolution and that time integration can be best accomplished by summing n traces. Segmenting the integration process requires a reference marker for each trace that is accurate to within a fraction of the width of a spectral line as well as data storage and summing devices, but reasonably priced equipment is readily available and there is a wide variety of component combinations that may be devised to accomplish the task. The most convenient and useful is one which digitalizes the spectrometer output voltage, stores and sums the results in digital counters, and provides a continuous visual monitor of the integration process. Time integration is one of the few measurement processes during which the significant figures of the result increase and the great dynamic range easily obtained with digital counters is an advantage over the analog filter circuits employed in single pass time integration. Full information content of a spectrum may be retained with about 4–6 samples per line width.

We have carried out experiments with a Varian A-60 n.m.r. spectrometer. The A-60 has proton resonance stabilization of the magnetic field and while it is possible to obtain some of the benefits of time integration without it[8] integration beyond 2 or 3 hr. makes n.m.r.-

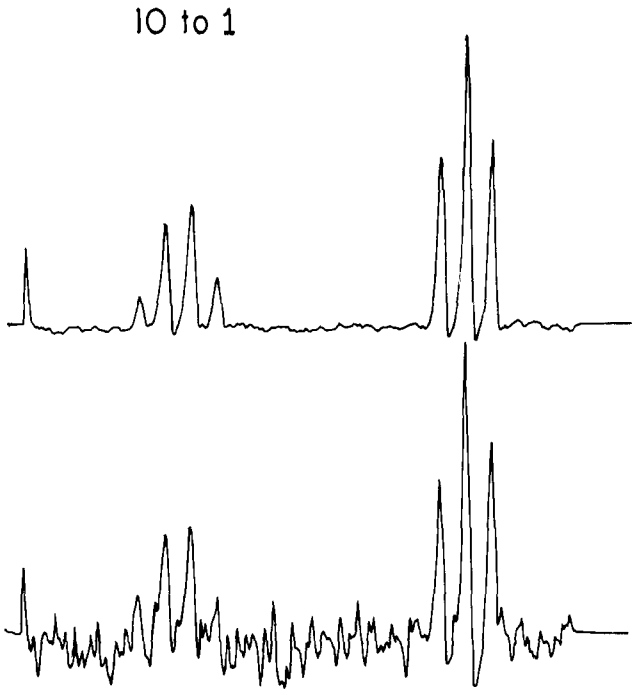

Fig. 1.—Top: Normalized sum of 100 sweeps of 0.2% ethylbenzene in CCl_4. Bottom: A single 4-min. trace with a Varian A-60 spectrometer.

stabilization a practical necessity on any magnetic resonance spectrometer. The spectrometer output signal has been integrated with a commercially available computer of average transients (CAT).[9,10] The CAT combines a voltage-to-frequency converter, 400 channel analyzer, timing circuits, and an oscilloscope display in one unit. In addition, provision has been made to feed the result of the integration back through the spectrometer chart recorder to obtain a spectral trace in the standard chart format after completing a run.

The trace reference marker (generally TMS) is used to trigger the channel filling timing circuitry and must be added to the sample vial in sufficient amount to be clearly visible on each trace to ensure an unambiguous trigger pulse. In general one wants to put the trigger reference line (a side band of the TMS line) as close to the line pattern to be investigated as possible but successive addition of traces can cause the tail of the trigger reference line to swamp out the adjacent region of the spectrum. This problem has been solved by use of a simple flip-flop circuit with relays that returns the output signal to zero immediately after triggering has occurred. Microswitches at each end of the desired sweep range are easily attached to the chart recorder table and connected into the circuitry of the spectrometer to provide automatic retrace with no attention or further adjustments on the part of the investigator. Using this arrangement we have made a 14-hr. run on a 0.004% solution of ethylbenzene in CCl_4 which summed 2500 traces (a 16-sec. section of the 4-min. sweep position on the A-60 was used with a 8-sec. flyback time). This yields an S/N increase of 50 over the 0.2% ethylbenzene solution that is just visible on the 4-min. sweep

(2) M. A. Golub, S. A. Fuqua, and N. S. Bhacca, *J. Am. Chem. Soc.*, **84**, 4981 (1962).

(3) J. C. Davis, K. S. Pitzer, and C. N. R. Rao, *J. Phys. Chem.*, **64**, 1744 (1960).

(4) P. Laszlo and P. von R. Schleyer, *J. Am. Chem. Soc.*, **85**, 2017 (1963).

(5) L. H. Piette, Sixth International Symposium on Free Radicals, Cambridge, England, July, 1963.

(6) P. Diehl, 4th OCEANS Conference, Mellon Institute, February, 1963.

(7) Primas, Arndt, and Ernst, *Z. Instrumentenk.*, **68**, 57, 59 (1960).

(8) O. Jardetzky (Pharmacology Department, Harvard Medical School), private communication. Jardetzky has used a CAT with an unstabilized magnetic resonance spectrometer.

(9) Mnemotron Company, subsidiary of Technical Measurement Corp., North Haven, Conn.

(10) M. P. Klein and G. Barton (Lawrence Radiation Laboratory, Livermore) have employed a voltage-to-frequency converter coupled to a multichannel analyzer and obtained good results for several physics experiments. Design of their system and spectrometer noise characteristics are given in Univ. of Calif. Rad. Lab. Report, UCRL 6727 Rev. 1.

position. Since our present equipment contains only a 400 channel analyzer, search of the usual 500 c.p.s. proton range requires dividing this range into six or seven sections. A 4096 channel analyzer would be ideal for a full range search and these are just becoming available.

Acknowledgment.—We wish to thank Dr. James N. Shoolery for several helpful discussions.

DEPARTMENT OF CHEMISTRY
PRINCETON UNIVERSITY
PRINCETON, NEW JERSEY
LELAND C. ALLEN

INSTRUMENT DIVISION
VARIAN CORPORATION
PALO ALTO, CALIFORNIA
LEROY F. JOHNSON

RECEIVED FEBRUARY 4, 1963

Intramolecular Electronic Energy Transfer in 4-(1-Naphthylmethyl)benzophenone

Sir:

We have obtained evidence for intramolecular transfer of both singlet and triplet excitation in 4-(1-naphthylmethyl)benzophenone (I).[1]

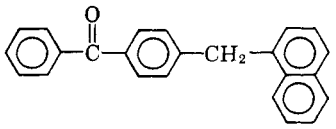

I

The absorption spectrum of I is virtually superimposable upon that of an equimolar mixture of 1-methylnaphthalene and 4-methylbenzophenone. That is, I contains two independent absorbing systems. I was used as sensitizer in the *cis–trans* isomerization of piperylene.[2]

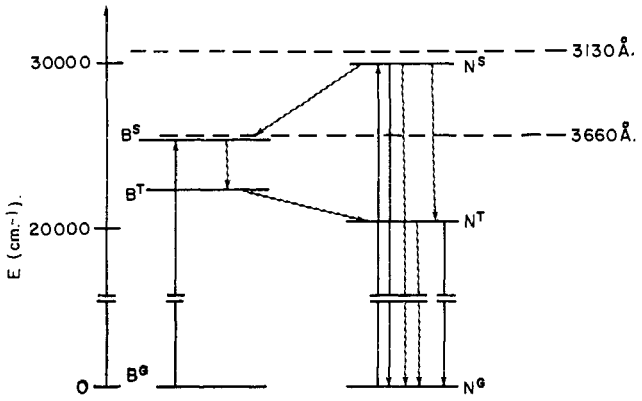

Fig. 1.—Excitation energies to the first excited singlet (S) and lowest triplet (T) states from ground (G) states of benzophenone (B) and naphthalene (N) moieties in 4-(1-naphthylmethyl)benzophenone; absorption and radiation are represented by straight arrows; wavy arrows represent radiationless processes.

Using light absorbed only by the benzophenone moiety,[3] the photostationary *trans*/*cis* ratio obtained is 2.03 (*c.f.*, benzophenone, 1.30,[4] and naphthalene, 2.18). Energy transfer from I to the piperylenes must be taking place from a naphthalene-like triplet even though only the benzophenone moiety was initially excited.

Measurements of relative quantum yields for conversion of *cis*-piperylene to the *trans* isomer using 1-methylnaphthalene, I, and 4-methylbenzophenone, with light filtered to remove all components other than the 3130 Å. band, are given in Table I.

(1) The synthesis of I will be reported in a later paper.

(2) See G. S. Hammond, N. J. Turro, and P. A. Leermakers, *J. Phys. Chem.*, **66**, 1144 (1962), for a discussion of sensitized olefin isomerizations.

(3) 1-Methylnaphthalene does not absorb at wave lengths longer than 3200 Å.; λ_{max} for the n → π* transition in benzophenone lies at 3430 Å. (ε 132).

(4) N. J. Turro, unpublished results.

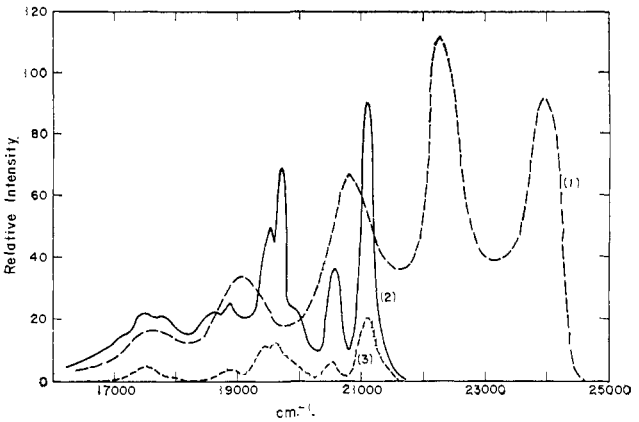

Fig. 2.—Phosphorescence from EPA solutions at 77°K.: (1) equimolar mixture of 1-methylnaphthalene and 4-methylbenzophenone, (2) 4-(1-naphthylmethyl)benzophenone, (3) 1-methylnaphthalene.

Since energy transfer from 1-methylnaphthalene triplets to *cis*-piperylene is probably as efficient as transfer from 4-methylbenzophenone triplets,[5] the low relative quantum yield for 1-methylnaphthalene is attributed to relatively low efficiency of intersystem crossing.[7] A sequence of intramolecular energy transfers (Fig. 1) would allow efficient intersystem crossing in the ketonic moiety to implement efficient conversion of I to naphthalene-like triplets. Spectroscopic evidence for such a sequence is clear.

TABLE I

RELATIVE QUANTUM YIELDS FOR THE SENSITIZED ISOMERIZATION OF *cis*-PIPERYLENE[a] AT ROOM TEMPERATURE

Sensitizer	$\phi c \rightarrow t$
4-Methylbenzophenone	1.00
I	0.83
1-Methylnaphthalene	0.34

[a] Degassed benzene solutions containing 0.1 *M* *cis*-piperylene and 0.05 *M* sensitizer were irradiated. Relative quantum yields were obtained by comparing the amount of *trans*-piperylene produced in samples irradiated simultaneously. All incident light was absorbed and reactions were carried only to low conversion.

The only emission detected[9] from an equimolar mixture of 1-methylnaphthalene and 4-methylbenzophenone under excitation with 3660 Å. light was that of 4-methylbenzophenone; apparently, at the concentrations employed (5×10^{-3} *M*) there is little intermolecular energy transfer.[10] The phosphorescence spectrum of I, however, is almost identical with that of 1-methylnaphthalene (Table II) even when only the benzophenone moiety is excited.

No emission characteristic of 4-methylbenzophenone was observed from I under conditions where 0.1%

(5) Transfers exothermic by about four or more kilocalories are diffusion controlled.[6] The lowest triplet of *cis*-piperylene lies 4 kcal. below that of 1-methylnaphthalene and 12 kcal. below that of 4-methylbenzophenone. The high concentration of *cis*-piperylene ensured that sensitizer triplets were quenched by piperylene.

(6) K. Sandros and H. Bäckstrom, *Acta Chem. Scand*, **16**, 958 (1962).

(7) The efficiency of intersystem crossing is similar in 4-methylbenzophenone and benzophenone; the efficiency in the latter case has been judged to be unity[8] but may be slightly lower.

(8) W. M. Moore, G. S. Hammond, and R. P. Foss, *J. Am. Chem. Soc.*, **83**, 2789 (1961).

(9) Emission spectra were measured in EPA at 77°K. with a photoelectric spectrophosphorimeter consisting of a Jarrell-Ash Ebert scanning monochromator (f/9), an EMI 9558 photomultiplier tube, a "rotating can" phosphoroscope, and appropriate recording electronics. A General Electric AH4 source was employed along with appropriate Corning glass or interference filters to isolate the groups of mercury lines near 3130 and 3660 Å. For fluorescence studies the phosphoroscope was removed.

(10) A. Terenin and V. Ermolaev, *Trans. Faraday Soc.*, **52**, 1042 (1956).